SITE PLAN DIAGRAM NOT TO SCALE

LEGEND

ZONING LOT LINE

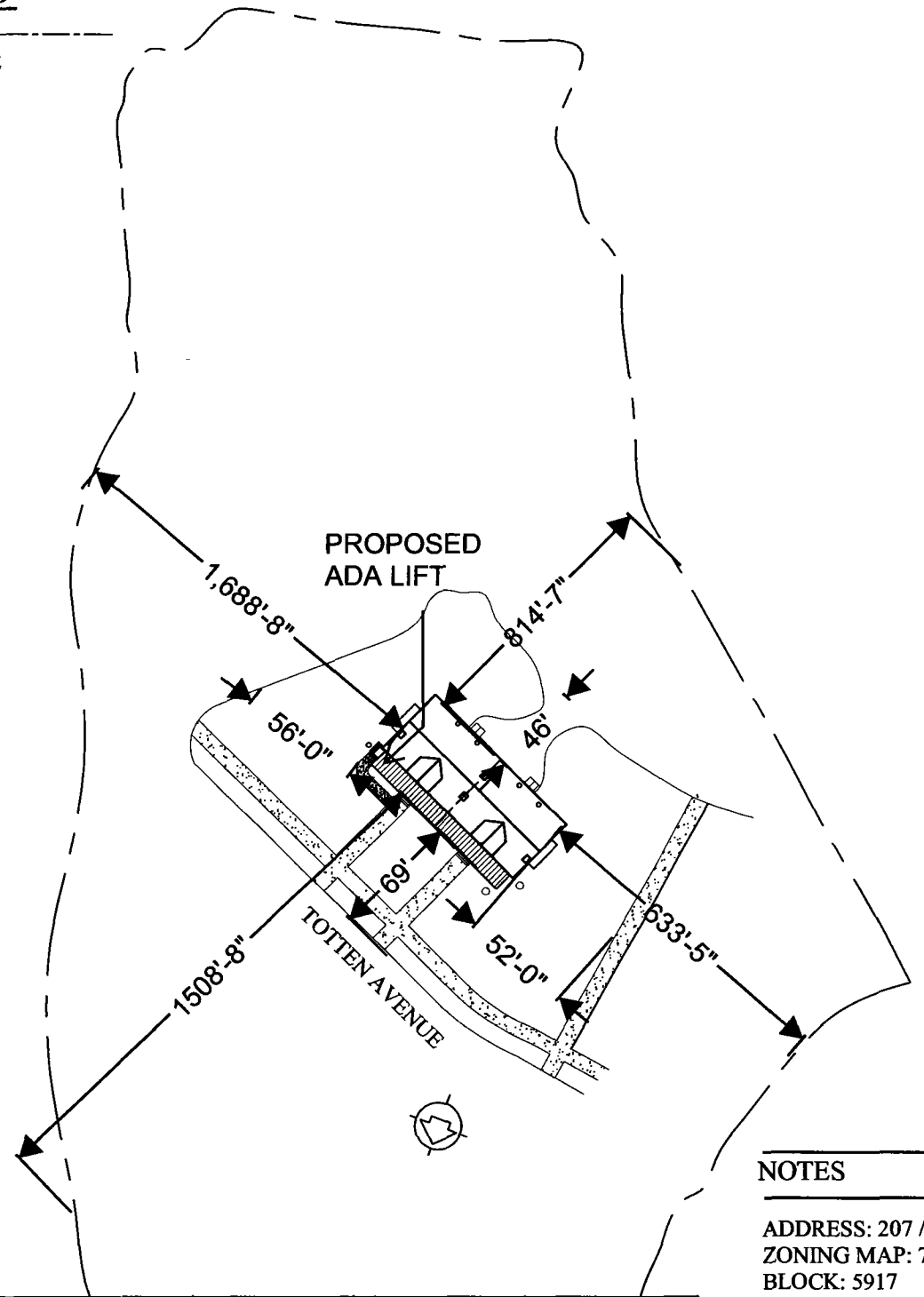

	EXISTING	PROPOSED (NO CHANGE)	MINIMUM ALLOWED
FRONT YARD	69'-0"	NO CHANGE	15'-0"
REAR YARD	46'-0"	NO CHANGE	30'-0"
SIDE YARD 1	52'-0"	NO CHANGE	13'-6"
SIDE YARD 2	56'-0"	NO CHANGE	13'-6"
HEIGHT			MAXIMUM
FRONT WALL	24'-8"	NO CHANGE	25'-0"
SETBACK	1 TO 1	NO CHANGE	1 TO 1

AXONOMETRIC DIAGRAM NOT TO SCALE

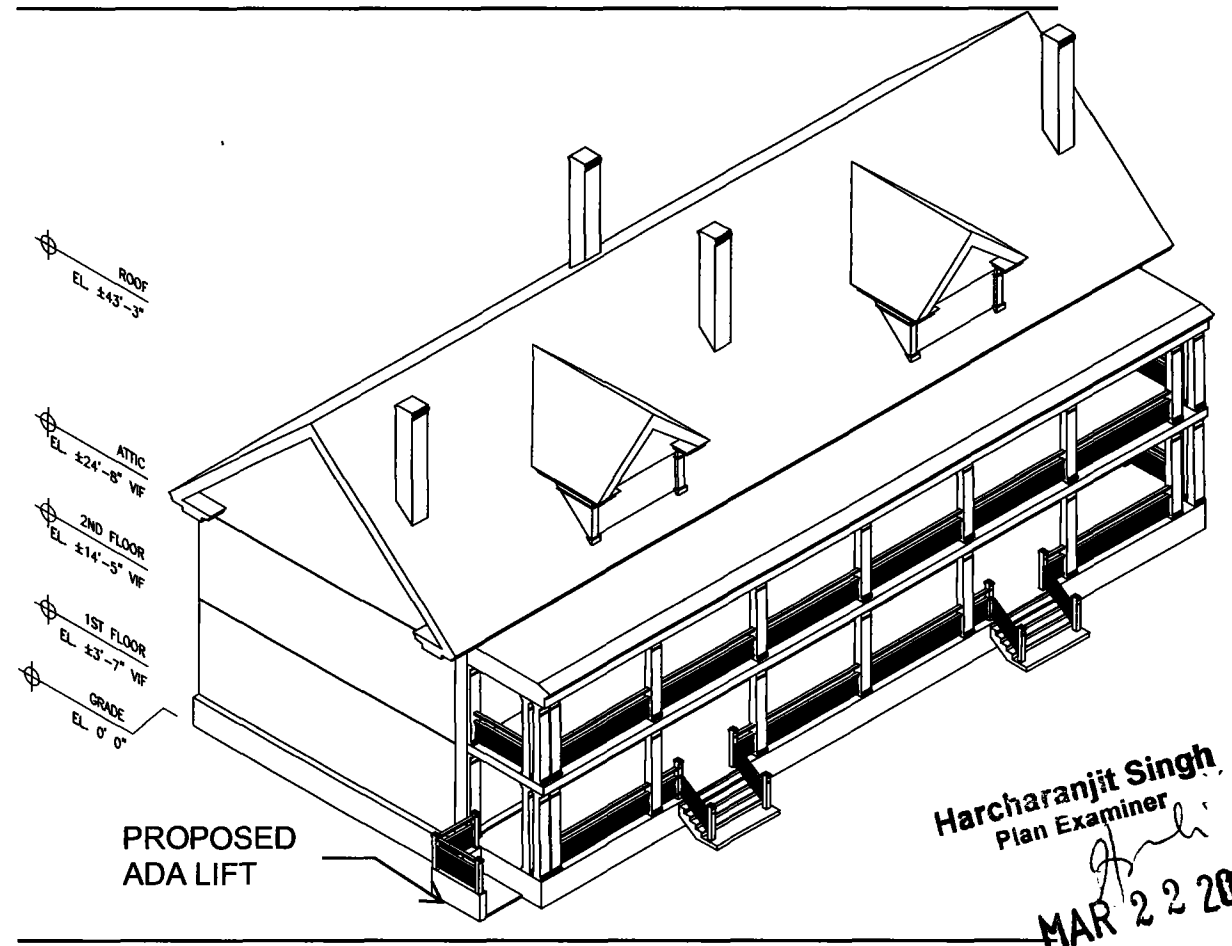

Harcharanjit Singh
Plan Examiner
MAR 22 2018

SECTION DIAGRAMS NOT TO SCALE

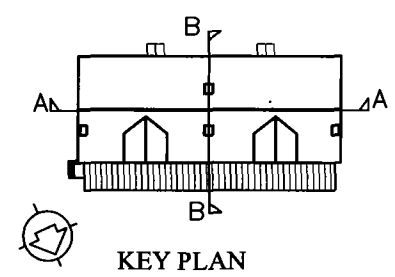

KEY PLAN

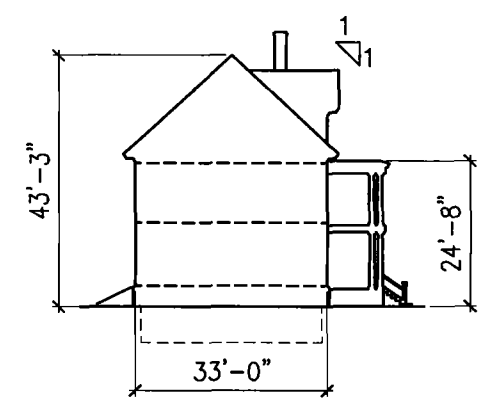

SECTION B-B

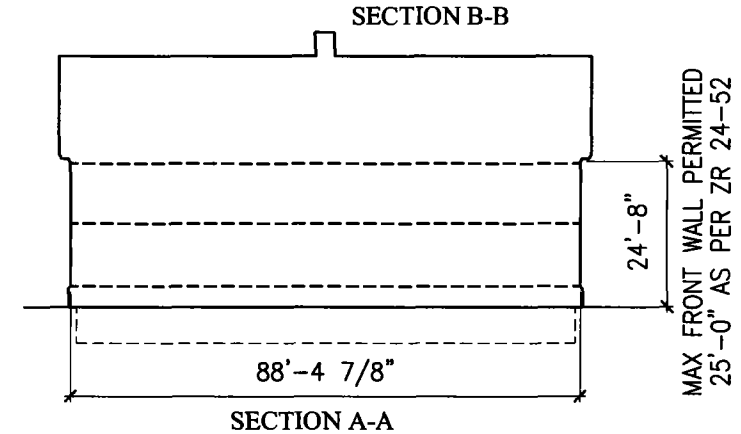

SECTION A-A

NOTES

ADDRESS: 207 / 207A TOTTEN AVENUE
ZONING MAP: 7D / 11C
BLOCK: 5917
LOT: 1
ZONING DISTRICT: R3-1
SPECIAL DISTRICT: FORT TOTTEN / NA-4
LOT AREA: 5,926,250 SF (ENTIRE FORT)
FLOOR AREA: 7,738 SF
EXISTING FAR: 0.001
PROPOSED FAR: 0.001

NO CHANGE IN BUILDING HEIGHT OR FLOOR AREA

NYC Buildings

ZD1 Zoning Diagram

Must be typewritten.

DEPT BLDGS Job No. 421145521
Scan Code ESHS1554769

Submitted to resolve objections stated in a notice of intent to revoke issued pursuant to rule 101-15. ☐Yes ☐No

Location Information

House No(s)	207/ 207 A
Street Name	TOTTEN AVENUE
Borough	QUEENS
Block	5917
Lot	1
BIN	4539865

Falsification of any statement is a misdemeanor and is punishable by a fine or imprisonment, or both. It is unlawful to give to a city employee, or for a city employee to accept, any benefit, monetary or otherwise, either as a gratuity for properly performing the job or in exchange for special consideration. Violation is punishable by imprisonment or fine or both. I understand that if I am found after hearing to have knowingly or negligently falsified or allowed to be falsified any certificate, form, signed statement, application, report or certification of the correction of a violation required under the provisions of this code or of a rule of any agency, I may be barred from filing further applications or documents with the Department.

Name (please print) PAGE A COWLEY

Signature Date 9/07/2017

REGISTERED ARCHITECT PAGE AYRES COWLEY 018125 STATE OF NEW YORK

P.E. / R.A. Seal *(apply seal, then sign and date over seal)*

Internal Use Only

BIS Doc #

PLAN EXAMINER SIGN AND DATE

07/09

NYC Buildings

ZD1 Zoning Diagram

Must be typewritten.

Sheet _____ of _____

1 Applicant Information *Required for all applications.*

Last Name COWLEY First Name PAGE Middle Initial

Business Name PAGE A COWLEY ARCHITECTS Business Telephone

Business Address 10 EAST 33RD STREET Business Fax

City NEW YORK State NY Zip 10016 Mobile Telephone

E-Mail PCOWLEY@PAC-ARCHITECTS.COM License Number 018125

2 Additional Zoning Characteristics *Required as applicable.*

Dwelling Units Parking area sq. ft. Parking Spaces: Total Enclosed

3 BSA and/or CPC Approval for Subject Application *Required as applicable.*

Board of Standards & Appeals (BSA)

- ☐ Variance Cal. No._____ Authorizing Zoning Section 72-21
- ☐ Special Permit Cal. No._____ Authorizing Zoning Section_____
- ☐ General City Law Waiver Cal. No._____ General City Law Section_____
- ☐ Other Cal. No._____

City Planning Commission (CPC)

- ☐ Special Permit ULURP No. _____ Authorizing Zoning Section _____
- ☐ Authorization App. No. _____ Authorizing Zoning Section _____
- ☐ Certification App. No. _____ Authorizing Zoning Section _____
- ☐ Other App. No. _____

4 Proposed Floor Area *Required for all applications. One Use Group per line.*

Floor Number	Building Code Gross Floor Area (sq. ft.)	Use Group	Zoning Floor Area (sq. ft.)				FAR
			Residential	Community Facility	Commercial	Manufacturing	
001	2634	4		2634			
002	2634	VACANT		2634			
ATTIC	2470	VACANT		2470			

ZD1

Sheet _____ of _____

4 Proposed Floor Area *Required for all applications. One Use Group per line.*

Floor Number	Building Code Gross Floor Area (sq. ft.)	Use Group	Zoning Floor Area (sq. ft.)				FAR
			Residential	Community Facility	Commercial	Manufacturing	
Totals	7738			7738			

Total Zoning Floor Area	.001

07/09